Pietro Fiorentini

Dival 600

Gas regulator for medium and low pressure

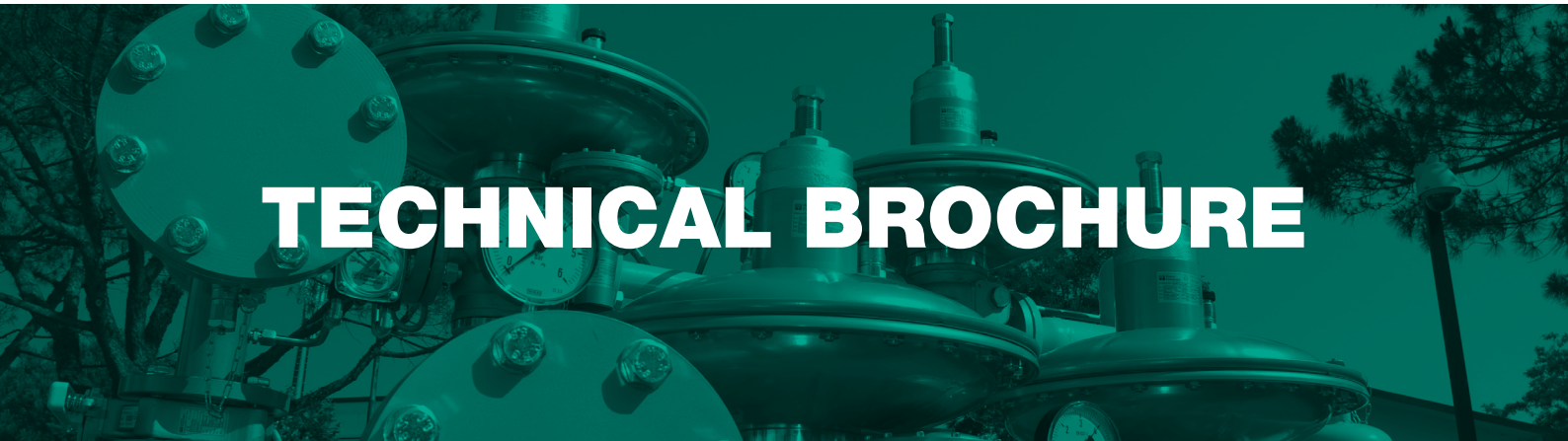

Pietro Fiorentini S.p.A.
Via E.Fermi, 8/10 | 36057 Arcugnano, Italy | +39 0444 968 511
sales@fiorentini.com

dival600_technicalbrochure_ENG_revE

www.fiorentini.com

Who we are

We are an international company specialising in the design and manufacture of cutting-edge devices and solutions for natural gas processing, transport and distribution systems. We are the ideal partner for operators in the Oil & Gas sector, with a business offer that goes across the whole natural gas chain.

We are in constant evolution to meet our customers' highest expectations in terms of quality and reliability.

Our aim is to be a step ahead of the competition, with customised technologies and an after-sale service program undertaken with the highest grade of professionalism.

Pietro Fiorentini advantages

- Localised technical support
- Experience since 1940
- We operate in over 100 countries

Application area

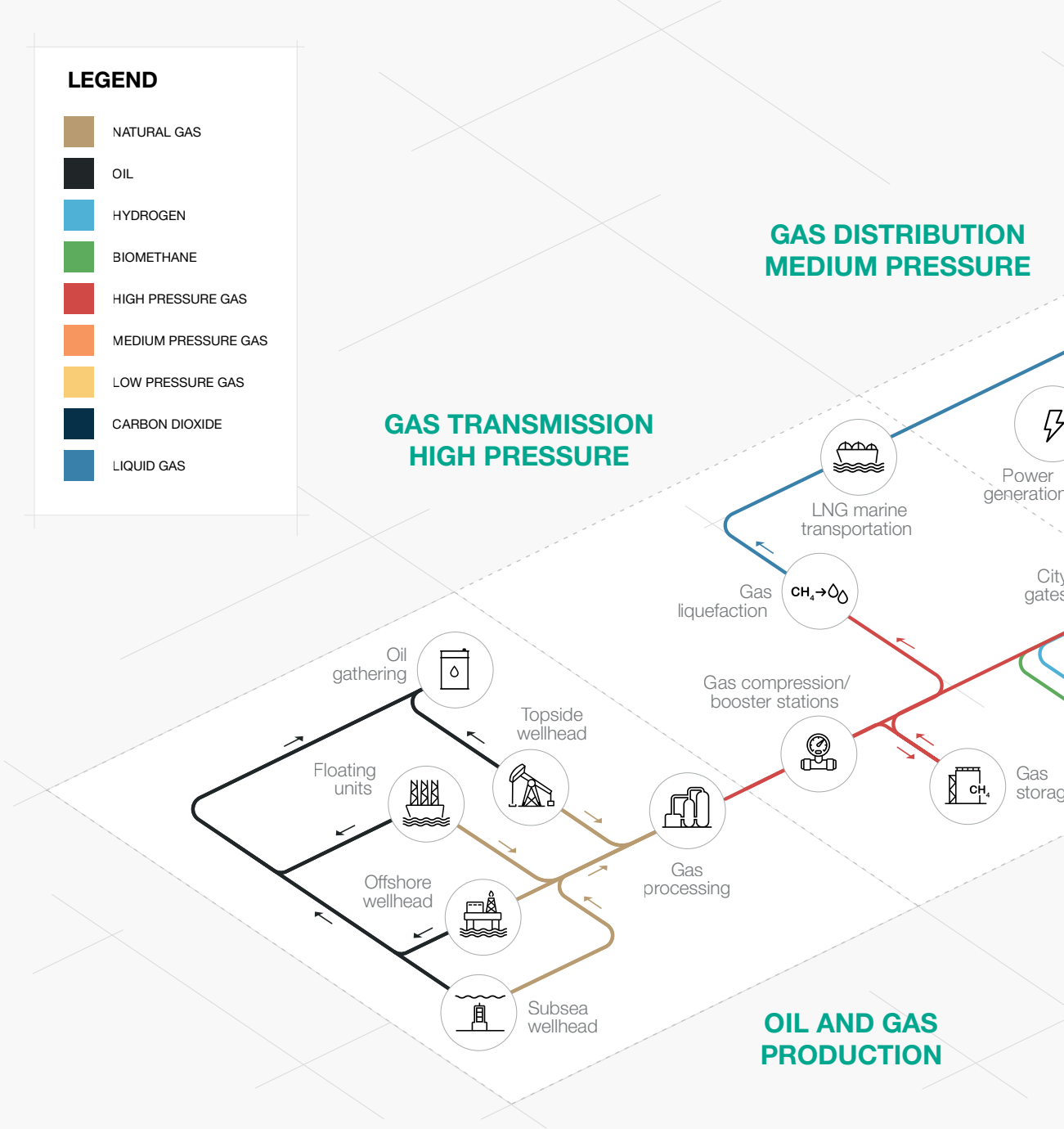

Green icon indicates the field of application in which the product can be used

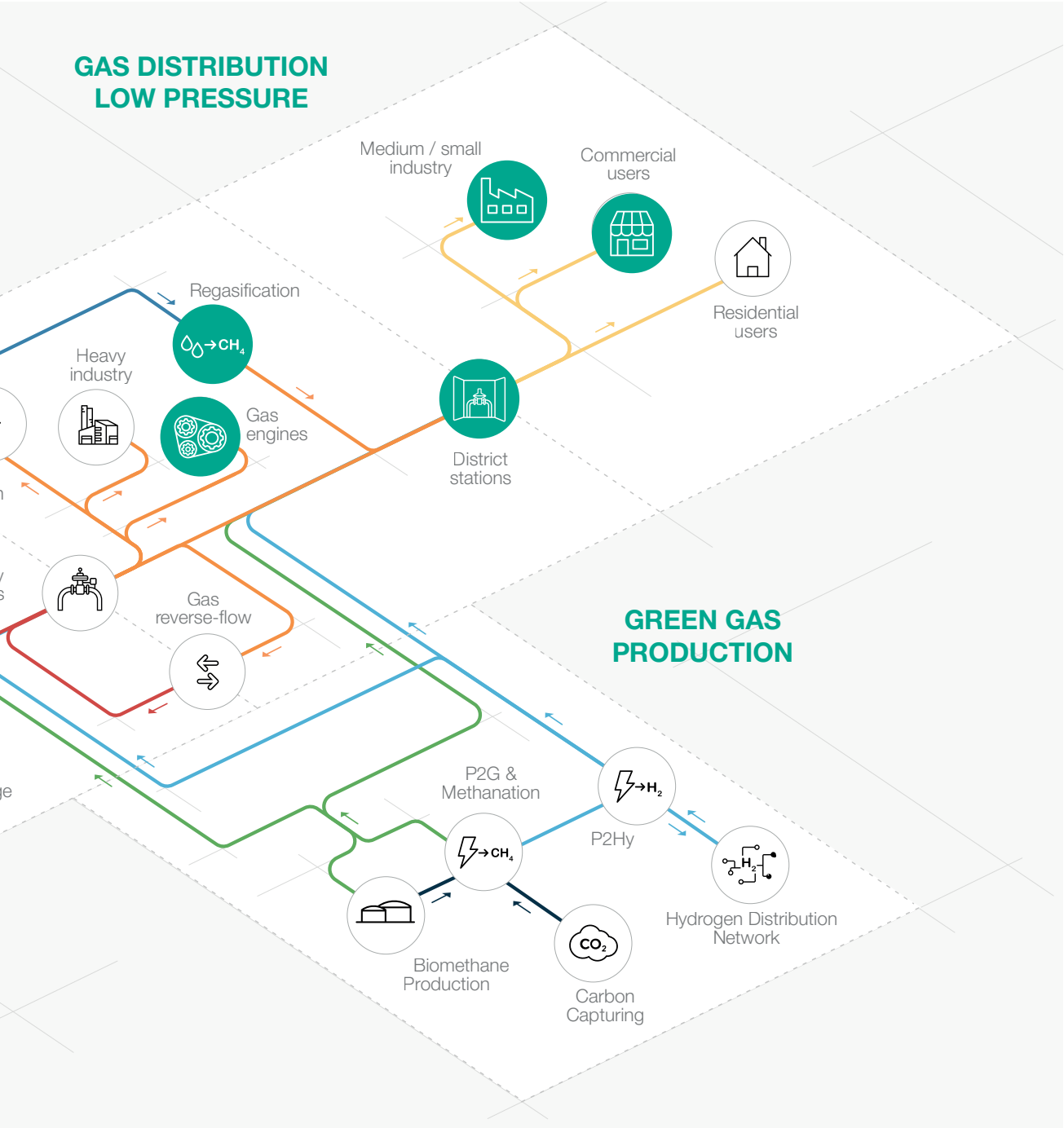

Figure 1 Map of application areas

Introduction

Dival 600 is part of Pietro Fiorentini's range of **direct-acting gas pressure regulators** with diaphragm control and spring contrast.

Mainly used in medium and low pressure natural gas distribution networks, it is also widely used for commercial and industrial installations.

The Dival 600 can be used with pretreated non-corrosive gaseous fluids.

It is classified as **Fail Open** according to the European Standard EN 334.

Dival 600 is **Hydrogen Ready** for GN-H2 mixtures**.**

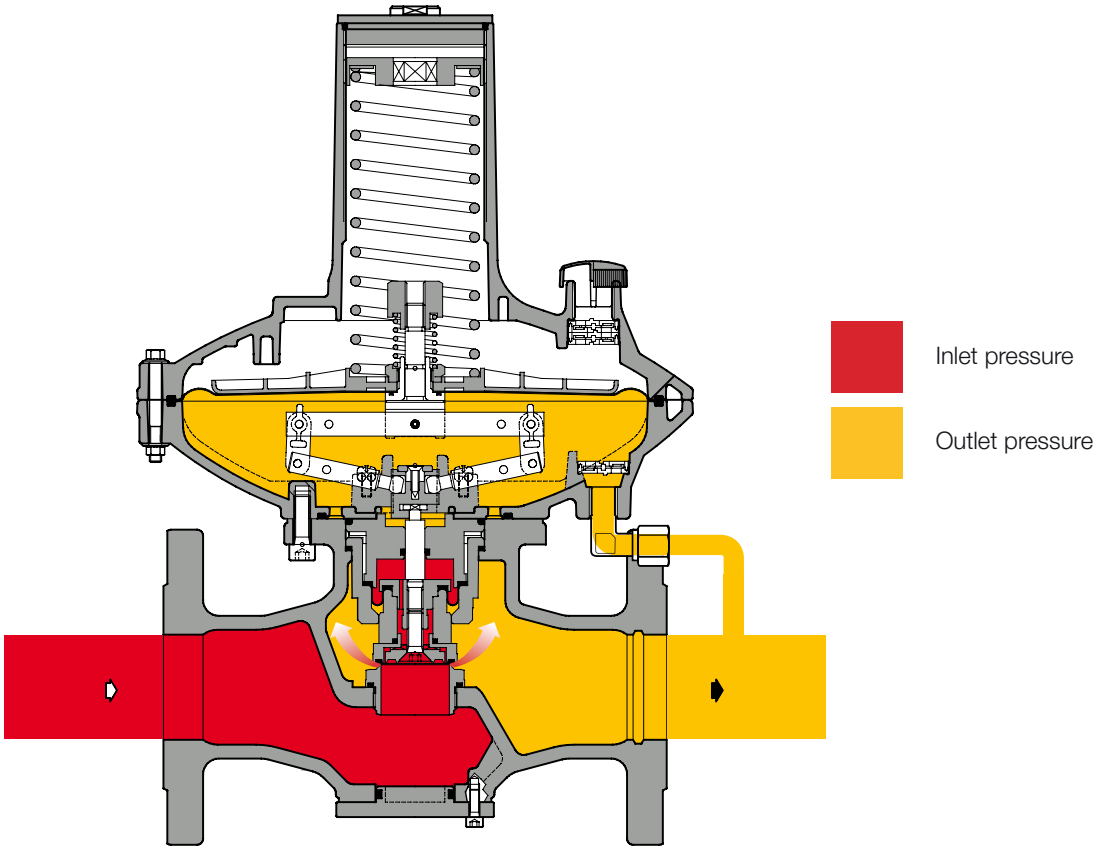

Figure 2 Dival 600

Description and Calibration interval

Dival 600 is a **direct-operated pressure regulator** that provides extremely accurate control of the outlet pressure.

The features of the Dival 600 series regulator make it suitable for any application.

The fast response time makes them optimal for industrial applications where sudden changes in flow rate may occur; the accuracy of regulation in the event of changes in inlet pressure also makes the Dival 600 series regulators an excellent product for civil gas distribution systems.

The design of the **Dival 600** regulator allows for easy installation in all the inlet and outlet pipe positions that the field conditions may have.

The modular design of the **Dival 600** pressure regulator allows the blocking device or the device for use as an 'inline monitor' to be attached to the same regulator body without changing the gauge**.**

Figure 3 Dival 600

Figure 4 Dival 600 with LA

Dival 600 competitive advantages

- Balanced type
- Operates with low differential pressure
- High precision
- Fail Open Regulator
- 1:200 High turn-down ratio
- IRV token
- Top Entry
- Easy maintenance
- Built-in accessories
- Compatible with biomethane and blended hydrogen up to 20%. Higher mixtures available on request

Features

Features	Values
Design pressure* (PS[1] / DP[2])	up to 2 MPa up to 20 barg
Ambient temperature* (TS[1])**	from -20°C to + 60°C from -4 °F to +140 °F
Inlet gas temperature*,***	from -20°C to + 60°C from -4 °F to +140 °F
Inlet pressure (MAOP / p_{umax}[1])	from (Pd + 0.01) MPa to 2 MPa from (Pd + 0.1) barg to 20 barg
Range of downstream pressure (Wd[1])	from 1.2 KPa to 420 KPa from 12 mbarg to 4200 mbarg
Available accessories	LA slam shut, built-in silencer, monitor version, overflow
Minimum operating differential pressure (Δp_{min}[1])	0.01 MPa | 0.1 barg
Accuracy class (AC[1])	up to 5 | up to 1% absolute (depending on working conditions)
Lock-up pressure class (SG[1])	up to 10 (depending on version and set point)
Nominal size (DN[1,2])	DN 25 | 1"; DN 40 | 1" 1/2; DN 50 | 2";
Connections	• Flanged: class 150 RF according to ASME B16.5 and ASME B16.42 • ANSI Class 125 FF according to ASME B16.1, PN16/25 according to ISO 7005-1 and ISO 7005-2 • Threaded: Rp EN 10226-1, NPT ASME B1.20.1 (only size DN50 | 2")

([1]) according to EN334 standard
([2]) according to ISO 23555-1 standard
(*) NOTE: Different functional features and/or extended temperature ranges may be available on request. Stated inlet gas temperature range is the maximum for which the equipment's full performance, including accuracy is guaranteed. Product may have a different pressure or temperature ranges according to the version and/or installed accessories.
(**) NOTE: Stated temperature range is the operating range for which the equipment's mechanical resistance and leakage rate are guaranteed. Some body materials, if multiple choices are available, may not be suitable for all the available versions shown.
(***) NOTE: Stated temperature range is the range for which the equipment's full performance, including accuracy and lock-up are guaranteed. Some body materials, if multiple choices are available, may not be suitable for all the available versions shown.

Table 1 Features

Materials and Approvals

Part	Material
Equipment body	Cast iron GS 400-18 ISO 1083 Steel ASTM A216 WCB
Cover	Aluminium
Seat	Brass
Diaphragm	Canvas rubber
O-rings	Nitrile rubber
NOTES: the materials indicated above refer to the standard models. Different materials can be provided according to specific needs.	

Table 2 Materials

Construction Standards and Approvals

The **Dival 600** regulator is designed according to European standard EN 334.
The regulator reacts in opening (Fail Open) according to EN 334.

The product is certified according to European Directive 2014/68/EU (PED).
Leakage class: bubble tight, better than class VIII according to ANSI/FCI 70-3.

EN 334 PED-CE

Spring ranges and headers

Header pressure ranges					
		Head BP	Head MP	Head TR	Web link spring table
Model	DN	kPa mbar	kPa mbar	kPa mbar	
Dival 600	1”	1.2 - 34 12 - 340	-	30 - 420 300 - 4200	TT 1393
Dival 600	1” 1/2 - 2”	1.2 - 8.5 12 - 85	8 - 34 80 - 340	30 - 420 300 - 4200	TT 1393

Table 3 Control heads calibration range

General link to the calibration tables: **PRESS HERE** or use the QR code:

Maximum permissible operating pressures

Design pressures (p_s according to EN334)				
Version	Body		Slam-shut valve	
	MPa	barg	MPa	barg
PN16-25 Steel body	2.00	20	2.00	20
PN16-25 Cast iron body	2.00	20	2.00	20
#150 Steel body	1.89	18.9	2.00	20
#150 Cast iron body	1.70	17	2.00	20
Cast-iron threaded body	2.00	20	2.00	20

Table 4 Design pressures bodies and block valves

Design pressures (p_s according to EN334)				
Component	Head			
	BP/MP		TR	
	MPa	barg	MPa	barg
Cover	2.00	20	2.00	20
Diaphragm	0.07	0.7	0.88	8.8
Maximum Δp on the membrane	0.04	0.46	0.58	5.85

Table 5 Design pressures tested

MAOP maximum permissible operating pressure (p_{umax} according to EN334)					
Version		Head			
		BP/MP		TR	
		MPa	barg	MPa	barg
With / Without CE Marking	PN16-25 (all body materials)	2.00	20	2.00	20
	#150 Steel body	1.89	18.9	1.89	18.9
	#150 Cast iron body	1.70	17	1.70	17
	PN16-25 (all body materials) + slam shut	2.00	20	2.00	20
	#150 Steel body + slam shut	1.89	18.9	1.89	18.9
	#150 Cast iron body + slam shut	1.70	17	1.70	17
	Cast iron threaded body	2.00	20	2.00	20
	Cast iron threaded body + slam shut	2.00	20	2.00	20

Table 6 MAOP maximum permissible operating pressure with/without CE marking

Accessories

For the pressure regulator:

- Built-in silencer
- Slam-shut valve
- Monitor version

In-line Monitor

The in-line monitor is generally installed upstream of the active regulator.
Although the function of the monitor regulator is different, the two regulators are virtually identical from the point of view of their mechanical components. The only difference is that monitor is set at a higher pressure than active regulator.

The **Dival 600** with inline monitor function is a controller with a modified balancing assembly compared to the normal controller. This modification ensures a higher precision of the regulated pressure and thus an equally precise switching value without the danger of interference with the main regulator.

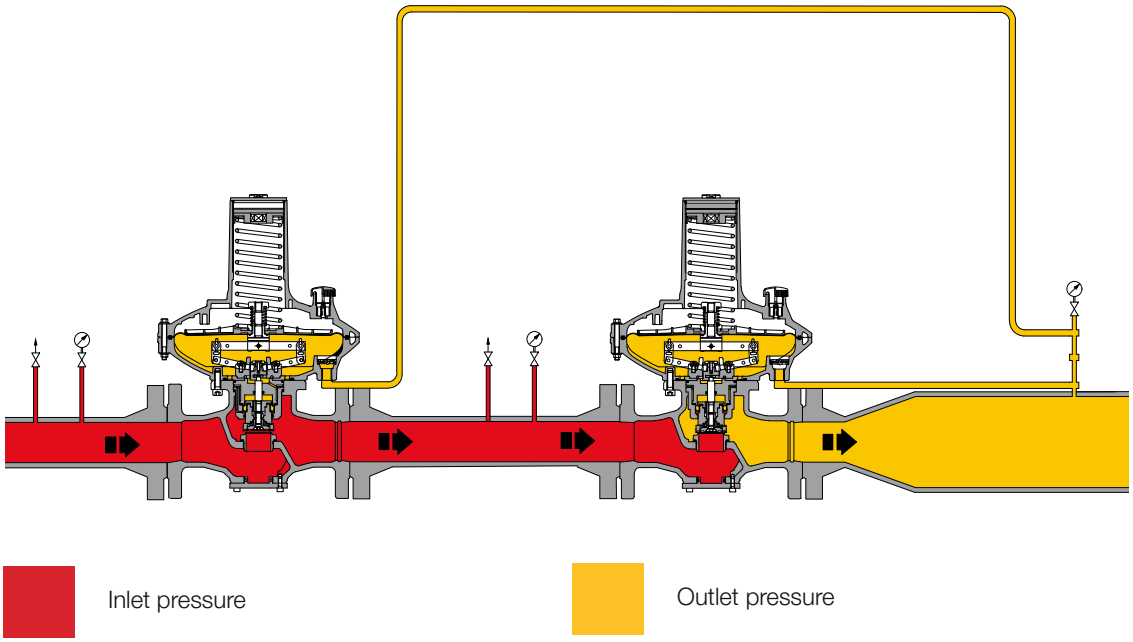

Figure 5 Dival 600 with in line Monitor function

Built-in silencer

Whenever certain noise limit is desired, an additional silencer allows to considerably reduce the noise level (dBA).

The Dival 600 pressure regulator can be supplied with an **incorporated silencer** in either the standard version or version with slam shut.

The high efficiency noise absorption takes place at the point where the noise is generated, thus preventing its propagation.

Given the modular arrangement of the regulator, the silencer may be retrofitted to both standard Dival 600 version as well as those with incorporated slam shut or monitor, **without the need to modify the main piping**.

Pressure reduction and control operate the same manner as standard version.

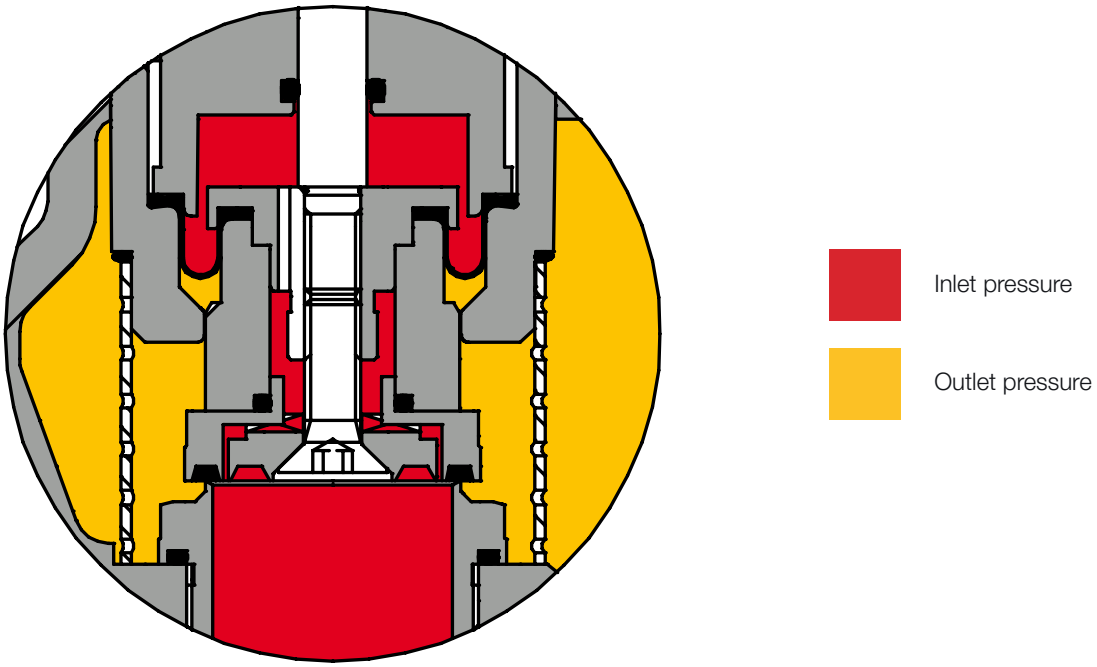

Figure 6 Dival 600 with incorporated silencer

Slam Shut LA

The Dival 600 pressure regulator offers the possibility of installing an incorporated LA slam shut valve and this can be done either during the manufacturing process or later in the field.

LA is available for all sizes.

The main characteristics of this device are:

- OPSO Over Pressure Shut-Off
- UPSO Under Pressure Shut-Off
- Internal by-pass
- Push button for tripping test
- Compact dimensions
- Easy maintenance
- Remote tripping option
- Limit switch option

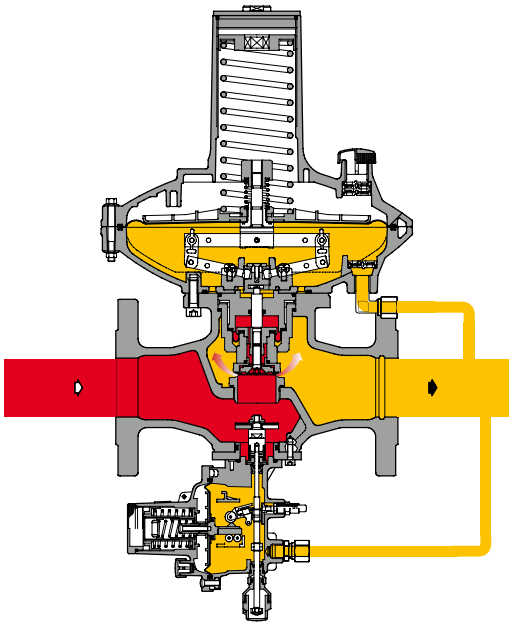

Inlet pressure

Outlet pressure

Figure 7 Dival 600 with LA slam shut valve

Pressure switches for slam shut valves types and setting ranges					
Slam shut model	**Type**	**Operation**	**Range Wh**		**Web link spring table**
			KPa	**mbarg**	
LA	BP	OPSO	3 - 18	30 - 180	TT 00214
		UPSO	0.6 - 6	6 - 60	
LA	MP	OPSO	14 - 45	140 - 450	TT 00214
		UPSO	1 - 24	10 - 240	
LA	TR	OPSO	25 - 550	250 - 5500	TT 00214
		UPSO	10 - 350	100 - 3500	

Table 7 Setting table

Weights and Dimensions

Dival 600

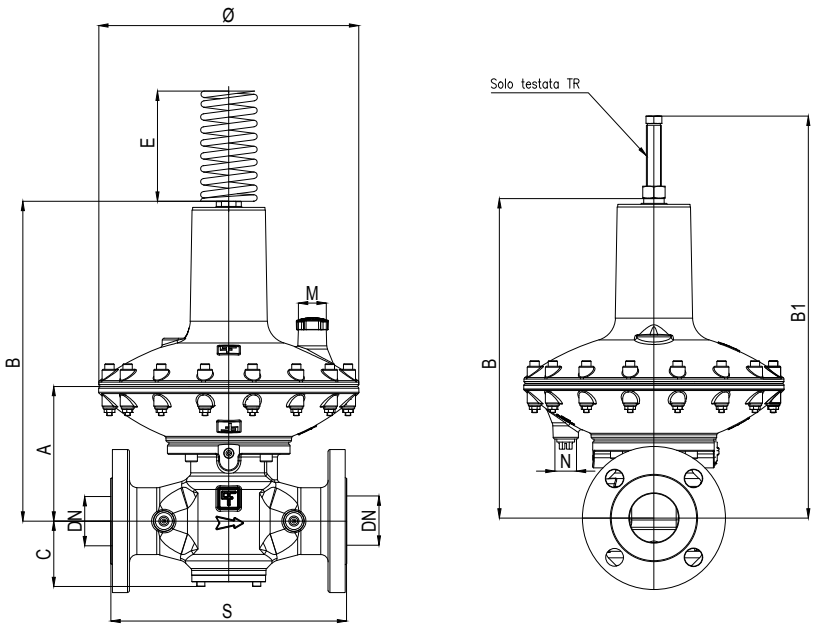

Figure 8 Dival 600 dimensions

Weights and Dimensions (for other connections please contact your closest Pietro Fiorentini representative)								
Nominal diameter [mm]	25		40		50		G 2”	
Size [inches]	1”		1” 1/2		2”		2" NPT	
	[mm]	inches	[mm]	inches	[mm]	inches	[mm]	inches
S	183	7.2”	222	8.7”	254	10”	152.4	6”
Ø	280	11.0”	280	11.0”	280	11.0”	280	11.0”
A	145	5.7”	145	5.7”	145	5.7”	145	5.7”
B	346	13.6”	346	13.6”	346	13.6”	346	13.6”
B1	472	18.6”	472	18.6”	472	18.6”	472	18.6”
C	65	2.56	70	2.8”	70	2.8”	70	2.8”
E	180	7.1”	180	7.1”	180	7.1”	180	7.1”
M	Rp 1/2”		Rp 1/2”		Rp 1/2”		Rp 1/2”	
N	Rp 1/4”		Rp 1/4”		Rp 1/4”		Rp 1/4”	
Connecting pneumatic connections	eØ 10 x iØ 8 (on request imperial sizing)							
Weight	Kg	lbs	Kg	lbs	Kg	lbs	Kg	lbs
Dival 600	14	30.9	17.5	38.6	18.5	40.8	13.8	30.4

Table 8 Weights and dimensions

Dival 600 + LA

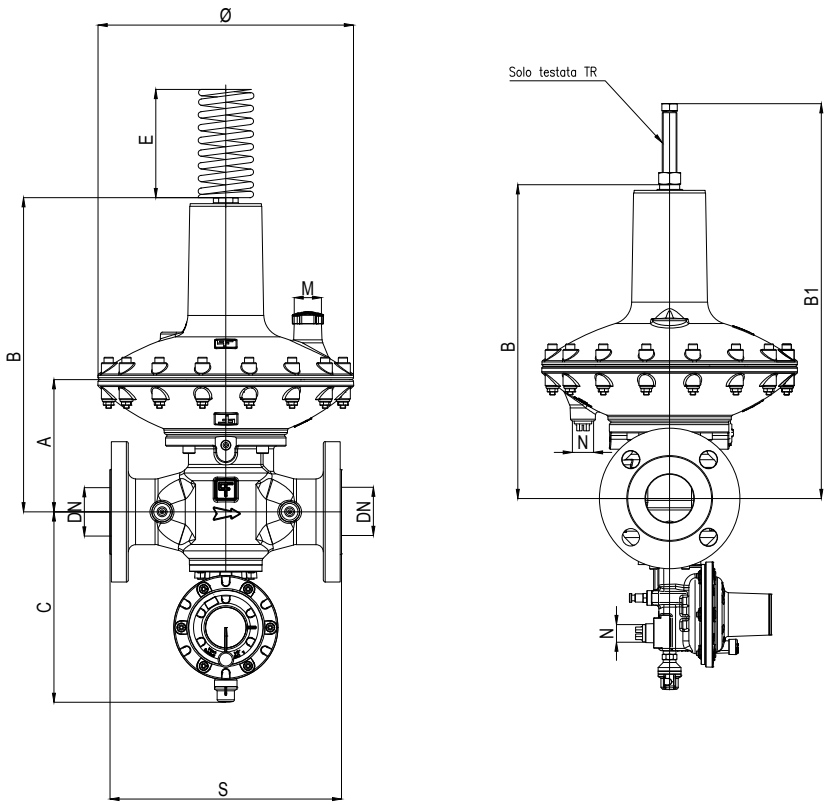

Figure 9 Dival 600 dimensions + LA

Weights and Dimensions (for other connections please contact your closest Pietro Fiorentini representative)								
Nominal diameter [mm]	25		40		50		G 2”	
Size [inches]	1”		1” 1/2		2”		2" NPT	
	[mm]	inches	[mm]	inches	[mm]	inches	[mm]	inches
S	183	7.2”	222	8.7”	254	10”	152.4	6”
Ø	280	11.0”	280	11.0”	280	11.0”	280	11.0”
A	145	5.7”	145	5.7”	145	5.7”	145	5.7”
B	346	13.6”	346	13.6”	346	13.6”	346	13.6”
B1	472	18.6”	472	18.6”	472	18.6”	472	18.6”
C	198	7.8”	210	8.3”	210	8.3”	210	8.3”
E	180	7.1”	180	7.1”	180	7.1”	180	7.1”
M	Rp 1/2”		Rp 1/2”		Rp 1/2”		Rp 1/2”	
N	Rp 1/4”		Rp 1/4”		Rp 1/4”		Rp 1/4”	
Connecting pneumatic connections	eØ 10 x iØ 8 (on request imperial sizing)							
Weight	Kg	lbs	Kg	lbs	Kg	lbs	Kg	lbs
Dival 600 + LA	14.8	32.6	18.5	40.8	19.5	43	14.8	32.6

Table 9 Weights and dimensions

Sizing and Cg

In general, the choice of a regulator is made based on the calculation of the flow rate determined by the use of formulae using the flow rate coefficients (Cg) and the form factor (K1) as indicated by the EN 334 standard. Sizing available through Pietro Fiorentini's online sizing programme.

Flow rate coefficient

	Ø280 BP / MP			Ø280 TR		
Diameter	25	40	50	25	40	50
Inches	1”	1” 1/2	2”	1”	1” 1/2	2”
Cg	267	698	818	311	749	811
K1	94	94	86	97	95	97

Table 10 Flow rate coefficient

For sizing **PRESS HERE** or use the QR code:

Note: In case you do not have the proper credentials to access, feel free to contact your closest Pietro Fiorentini representative.

In general the online sizing considers multiple variables as the regulator is installed in a system, enabling a better and multiperspective approach to the sizing.

For different gases, and for natural gas with a different relative density other than 0.61 (compared to air), the correction coefficients from the following formula shall be applied:

$$F_c = \sqrt{\frac{175.8}{S \times (273.16 + T)}}$$

S = relative density (refer to Table 11)
T = gas temperature (°C)

$$F_c = \sqrt{\frac{316.44}{S \times (459.67 + T)}}$$

S = relative density (refer to Table 11)
T = gas temperature (°F)

Correction Factor Fc		
Gas type	**Relative Density S**	**Correction Factor Fc**
Air	1.00	0.78
Propane	1.53	0.63
Butane	2.00	0.55
Nitrogen	0.97	0.79
Oxygen	1.14	0,73
Carbon dioxide	1.52	0.63
Note: the table shows the Fc correction factors valid for Gas, calculated at a temperature of 15°C and at the declared relative density.		

Table 11 Correction Factor Fc

Flow rate conversion
Stm^3/h x 0.94795 = Nm^3/h

Nm^3/h Reference conditions:
T= 0 °C; P= 1 bar(a) | T= 32 °F; P= 14.5 psi(a)
Stm^3/h Reference conditions:
T= 15 °C; P= 1 bar(a) | T= 59 °F; P= 14.5 psi(a)

Table 12 Flow rate conversion

CAUTION:

In order to get optimal performance, to avoid premature erosion phenomena and to limit noise emissions, it is recommended to check the gas speed and its compliance with local practice and regulations. The gas speed at the outlet flange may be calculated by means of the following formula:

$$V = 345.92 \times \frac{Q}{DN^2} \times \frac{1 - 0.002 \times Pd}{1 + Pd}$$

V = gas speed in m/s
Q = gas flow rate in Stm^3/h
DN = nominal size of regular in mm
Pd = outlet pressure in barg

$$V = 0.0498 \times \frac{Q}{DN^2} \times \frac{14.504 - 0.002 \times Pd}{14.504 + Pd}$$

V = gas speed in ft/s
Q = gas flow rate in Scfh
DN = nominal size of regular in inches
Pd = outlet pressure in psig

Flow rate tables

Dival 600 BP - DN 1"

From 1.2 kPa [12 mbarg] to 34 kPa [340 mbarg]

Dival 600 BP - (accuracy 10% ; AC10 according to EN334)

Input pressure		Output pressure									
		2 kPa / 20 mbarg		6 kPa / 60 mbarg		10 kPa / 100 mbarg		20 kPa / 200 mbarg		30 kPa / 300 mbarg	
MPa	barg	Stm³/h	Scfh	Stm³/h	Scfh	Stm³/h	Scfh	Stm³/h	Scfh	Stm³/h	Scfh
0.05	0.5	170	6100	166	5900	150	5300	145	5200	115	4100
0.10	1.0	260	9200	273	9700	250	8900	250	8900	230	8200
0.20	2.0	429	15200	437	15500	419	14800	409	14500	429	15200
0.50	5.0	676	23900	764	27000	696	24600	696	24600	796	28200
1.00	10.0	911	32200	760	26900	693	24500	693	24500	792	28000
1.50	15.0	572	20200	740	26200	690	24400	690	24400	789	27900
2.00	20.0	373	13200	766	27100	688	24300	688	24300	786	27800

Cg = 267 K1= 94

Table 13 Dival 600 BP flow rates at outlet pressure from 2 kPa [20 mbarg] to 8.5 kPa [85 mbarg].

Dival 600 BP - DN 1"1/2

From 1.2 kPa [12 mbarg] to 8.5 kPa [85 mbarg]

Dival 600 BP - (accuracy 10% ; AC10 according to EN334)

Input pressure		Output pressure									
		2 kPa / 20 mbarg		2.5 kPa / 25 mbarg		4 kPa / 40 mbarg		6 kPa / 60 mbarg		8.5 kPa / 85 mbarg	
MPa	barg	Stm³/h	Scfh	Stm³/h	Scfh	Stm³/h	Scfh	Stm³/h	Scfh	Stm³/h	Scfh
0.05	0.5	440	15600	438	15500	433	15300	407	14400	350	12400
0.10	1.0	669	23700	669	23700	669	23700	638	22600	559	19800
0.20	2.0	998	35300	1014	35900	1064	37600	1097	38800	1097	38800
0.50	5.0	994	35100	1094	38700	1392	49200	1648	58200	1790	63300
1.00	10.0	990	35000	1122	39700	1518	53700	1782	63000	1782	63000
1.50	15.0	838	29600	994	35100	1463	51700	1775	62700	1775	62700
2.00	20.0	589	20800	786	27800	1376	48600	1769	62500	1769	62500

Cg = 698 K1= 94

Table 14 Dival 600 BP flow rates at outlet pressure from 2 kPa [20 mbarg] to 8.5 kPa [85 mbarg].

Note: guaranteed maximum flow rates consider multiple factors such as: extending the life of the regulator, mitigating erosion and vibration due to high speeds and minimising noise.
Please note: all indicated flow rates refer to the regulator without accessories. If there are incorporated accessories, an appropriate reduction should be considered.

Dival 600 BP - DN 2"

From 2 kPa [20 mbarg] to 8.5 kPa [85 mbarg]

Dival 600 BP - (accuracy 10% ; AC10 according to EN334)

Input pressure		Output pressure									
		2 kPa / 20 mbarg		2.5 kPa / 25 mbarg		4 kPa / 40 mbarg		6 kPa / 60 mbarg		8.5 kPa / 85 mbarg	
MPa	barg	Stm³/h	Scfh	Stm³/h	Scfh	Stm³/h	Scfh	Stm³/h	Scfh	Stm³/h	Scfh
0.05	0.5	520	18400	516	18300	506	17900	485	17200	450	15900
0.10	1.0	799	28300	791	28000	766	27100	735	26000	699	24700
0.20	2.0	1047	37000	1122	39700	1347	47600	1397	49400	1147	40600
0.50	5.0	1044	36900	1185	41900	1608	56800	1918	67800	1989	70300
1.00	10.0	1148	40600	1287	45500	1703	60200	1980	70000	1980	70000
1.50	15.0	888	31400	1068	37800	1611	56900	1972	69700	1972	69700
2.00	20.0	639	22600	860	30400	1523	53800	1965	69400	1965	69400

Cg = 818 K1= 86

Table 15 Dival 600 BP flow rates at outlet pressure from 2 kPa [20 mbarg] to 8.5 kPa [85 mbarg].

Dival 600 MP - DN 1"1/2

From 8 kPa [80 mbarg] to 34 kPa [340 mbarg]

Dival 600 MP - (accuracy 10% ; AC10 according to EN334)

Input pressure		Output pressure									
		10 kPa / 100 mbarg		15 kPa / 150 mbarg		20 kPa / 200 mbarg		25 kPa / 250 mbarg		30 kPa / 300 mbarg	
MPa	barg	Stm³/h	Scfh	Stm³/h	Scfh	Stm³/h	Scfh	Stm³/h	Scfh	Stm³/h	Scfh
0.05	0.5	400	14200	400	14200	400	14200	370	13100	340	12100
0.10	1.0	685	24200	699	24700	619	21900	619	21900	619	21900
0.20	2.0	1097	38800	1097	38800	998	35300	1048	37100	1098	38800
0.50	5.0	1620	57300	1691	59800	1592	56300	1592	56300	1592	56300
1.00	10.0	1641	58000	1782	63000	1683	59500	1733	61200	1783	63000
1.50	15.0	1634	57700	1775	62700	1677	59300	1726	61000	1775	62700
2.00	20.0	1698	60000	1769	62500	1769	62500	1769	62500	1769	62500

Cg = 698 K1= 94

Table 16 Dival 600 MP flow rates at outlet pressure from 8 kPa [80 mbarg] to 34 kPa [340 mbarg]

Note: guaranteed maximum flow rates consider multiple factors such as: extending the life of the regulator, mitigating erosion and vibration due to high speeds and minimising noise.
Please note: all indicated flow rates refer to the regulator without accessories. If there are incorporated accessories, an appropriate reduction should be considered.

Dival 600 MP - DN 2"

From 8 kPa [80 mbarg] to 34 kPa [340 mbarg]

Dival 600 MP - (accuracy 10% ; AC10 according to EN334)

Input pressure		Output pressure									
		10 kPa / 100 mbarg		15 kPa / 150 mbarg		20 kPa / 200 mbarg		25 kPa / 250 mbarg		30 kPa / 300 mbarg	
MPa	barg	Stm³/h	Scfh	Stm³/h	Scfh	Stm³/h	Scfh	Stm³/h	Scfh	Stm³/h	Scfh
0.05	0.5	400	14200	400	14200	400	14200	370	13100	340	12100
0.10	1.0	685	24200	699	24700	619	21900	619	21900	619	21900
0.20	2.0	1097	38800	1097	38800	998	35300	1048	37100	1098	38800
0.50	5.0	1620	57300	1691	59800	1592	56300	1592	56300	1592	56300
1.00	10.0	1641	58000	1782	63000	1683	59500	1733	61200	1783	63000
1.50	15.0	1634	57700	1775	62700	1677	59300	1726	61000	1775	62700
2.00	20.0	1698	60000	1769	62500	1769	62500	1769	62500	1769	62500

Cg = 818 K1= 86

Table 17 Dival 600 MP flow rates at outlet pressure from 8 kPa [80 mbarg] to 34 kPa [340 mbarg]

Dival 600 TR - DN 1"

From 30 kPa [300 mbarg] to 420 kPa [4200 mbarg]

Dival 600 TR - (accuracy 10% ; AC10 according to EN334)

Input pressure		Output pressure									
		50 kPa / 500 mbarg		100 kPa / 1000 mbarg		200 kPa / 2000 mbarg		300 kPa / 3000 mbarg		400 kPa / 4000 mbarg	
MPa	barg	Stm³/h	Scfh	Stm³/h	Scfh	Stm³/h	Scfh	Stm³/h	Scfh	Stm³/h	Scfh
0.05	0.5	-	-	-	-	-	-	-	-	-	-
0.10	1.0	180	6400	-	-	-	-	-	-	-	-
0.20	2.0	329	11700	310	11000	-	-	-	-	-	-
0.50	5.0	697	24700	757	26800	618	21900	578	20500	538	19000
1.00	10.0	862	30500	1090	38500	1389	49100	1323	46800	1256	44400
1.50	15.0	858	30300	1109	39200	1729	61100	1811	64000	1894	66900
2.00	20.0	855	30200	1111	39300	1772	62600	2087	73700	2402	84900

Cg = 311 K1= 97

Table 18 Dival 600 TR flow rates at outlet pressures from 30 kPa [300 mbarg] to 420 kPa [4200 mbarg]

Note: guaranteed maximum flow rates consider multiple factors such as: extending the life of the regulator, mitigating erosion and vibration due to high speeds and minimising noise.
Please note: all indicated flow rates refer to the regulator without accessories. If there are incorporated accessories, an appropriate reduction should be considered.

Dival 600 TR - DN 1"1/2

From 30 kPa [300 mbarg] to 420 kPa [4200 mbarg]

Dival 600 TR - (accuracy 10% ; AC10 according to EN334)

Input pressure		Output pressure									
		50 kPa / 500 mbarg		100 kPa / 1000 mbarg		200 kPa / 2000 mbarg		300 kPa / 3000 mbarg		400 kPa / 4000 mbarg	
MPa	barg	Stm³/h	Scfh	Stm³/h	Scfh	Stm³/h	Scfh	Stm³/h	Scfh	Stm³/h	Scfh
0.05	0.5	-	-	-	-	-	-	-	-	-	-
0.10	1.0	495	17500	-	-	-	-	-	-	-	-
0.20	2.0	838	29600	839	29700	-	-	-	-	-	-
0.50	5.0	1791	63300	1692	59800	1844	65200	1646	58200	1448	51200
1.00	10.0	1882	66500	1784	63000	1984	70100	1918	67800	1853	65500
1.50	15.0	1953	69000	1777	62800	1976	69800	1944	68700	1944	68700
2.00	20.0	1966	69500	1770	62500	2067	73000	2024	71500	1981	70000

Cg = 749 K1= 97

Table 19 Dival 600 TR flow rates at outlet pressures from 30 kPa [300 mbarg] to 420 kPa [4200 mbarg]

Dival 600 TR - DN 2"

From 30 kPa [300 mbarg] to 420 kPa [4200 mbarg]

Dival 600 TR - (accuracy 10% ; AC10 according to EN334)

Input pressure		Output pressure									
		50 kPa / 500 mbarg		100 kPa / 1000 mbarg		200 kPa / 2000 mbarg		300 kPa / 3000 mbarg		400 kPa / 4000 mbarg	
MPa	barg	Stm³/h	Scfh	Stm³/h	Scfh	Stm³/h	Scfh	Stm³/h	Scfh	Stm³/h	Scfh
0.05	0.5	-	-	-	-	-	-	-	-	-	-
0.10	1.0	540	19100	-	-	-	-	-	-	-	-
0.20	2.0	998	35300	999	35300	-	-	-	-	-	-
0.50	5.0	2488	87900	2489	87900	1894	66900	1896	67000	1898	67100
1.00	10.0	2476	87500	2478	87500	4464	157700	4469	157900	4473	158000
1.50	15.0	2466	87100	2468	87200	4446	157000	4450	157200	4454	157300
2.00	20.0	2457	86800	2458	86800	4429	156400	4433	156600	4437	156700

Cg = 811 K1= 97

Table 20 Dival 600 TR flow rates at outlet pressures from 30 kPa [300 mbarg] to 420 kPa [4200 mbarg]

Note: guaranteed maximum flow rates consider multiple factors such as: extending the life of the regulator, mitigating erosion and vibration due to high speeds and minimising noise.
Please note: all indicated flow rates refer to the regulator without accessories. If there are incorporated accessories, an appropriate reduction should be considered.

Pietro Fiorentini

TB0023ENG

dival600_technicalbrochure_ENG_revE

www.fiorentini.com